9–11 In Fig. 9–16, solve for the voltages V_{AG}, V_{BG}, V_{CG}, V_{DG}, and V_{AD}. Indicate the proper polarity for each voltage.

Figure 9–16

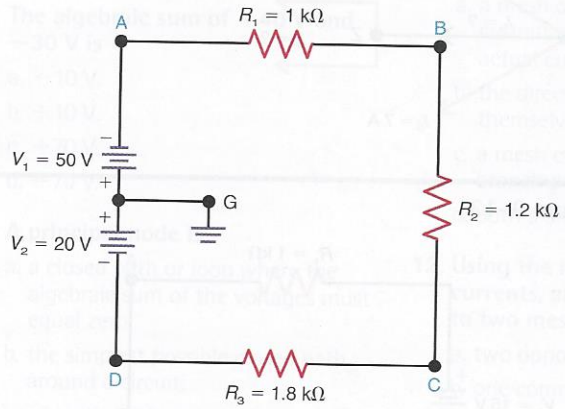

9–12 In Fig. 9–17, solve for the voltages V_{AG}, V_{BG}, and V_{CG}. Indicate the proper polarity for each voltage.

Figure 9–17

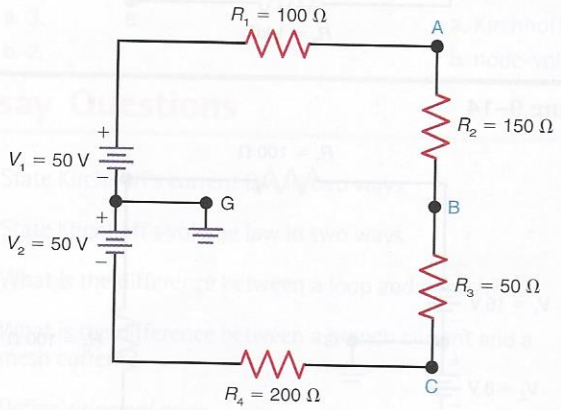

9–13 In Fig. 9–18, write a KVL equation for the loop ABDCA going counterclockwise from point A.

9–14 In Fig. 9–18, write a KVL equation for the loop EFDCE going clockwise from point E.

9–15 In Fig. 9–18, write a KVL equation for the loop ACEFDBA going clockwise from point A.

Figure 9–18

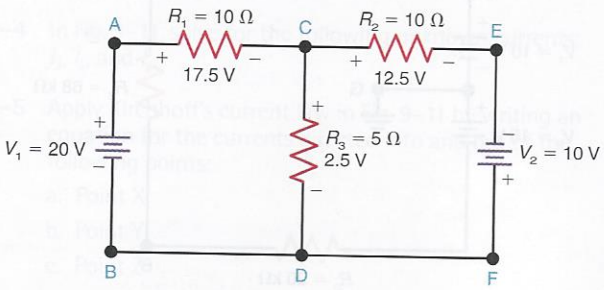

SECTION 9–3 METHOD OF BRANCH CURRENTS

9–16 Using the method of branch currents, solve for the unknown values of voltage and current in Fig. 9–19. To do this, complete steps a through m. The assumed directions of all currents is shown in the figure.

Figure 9–19

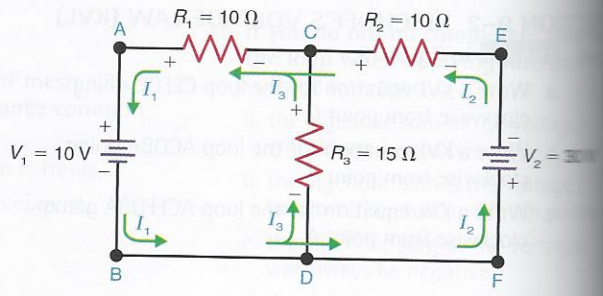

a. Using Kirchhoff's current law, write an equation for the currents I_1, I_2, and I_3 at point C.

b. Specify the current I_3 in terms of I_1 and I_2.

c. Write a KVL equation for the loop ABDCA, going counterclockwise from point A, using the terms V_{R_1} and V_{R_3}. This loop will be called Loop 1.

d. Write a KVL equation for the loop FECDF, going counterclockwise from point F, using the terms V_2, V_{R_2} and V_{R_3}. This loop will be called Loop 2.

e. Specify each resistor voltage drop as an *IR* product using actual resistor values for R_1, R_2, and R_3.

f. Rewrite the KVL equation for Loop 1 in step c using the *IR* voltage values for V_{R_1} and V_{R_3} specified in step e.

g. Rewrite the KVL equation for Loop 2 in step d using the *IR* voltage values for V_{R_2} and V_{R_3} specified in step e.

h. Reduce the Loop 1 and Loop 2 equations in steps f and g to their simplest possible form.

i. Solve for currents I_1 and I_2 using any of the methods for the solution of simultaneous equations. Next, solve for I_3.

j. In Fig. 9–19, were the assumed directions of all currents correct? How do you know?

k. Using the actual values of I_1, I_2, and I_3, calculate the individual resistor voltage drops.

l. Rewrite the KVL loop equations for both Loops 1 and 2 using actual voltage values. Go counterclockwise around both loops when adding voltages. (Be sure that the resistor voltage drops all have the correct polarity based on the actual directions for I_1, I_2, and I_3.)

m. Based on the actual directions for I_1, I_2, and I_3, write a KCL equation for the currents at point C.

9–17 Repeat Prob. 9–16 for Fig. 9–20.